# LUNAR bath

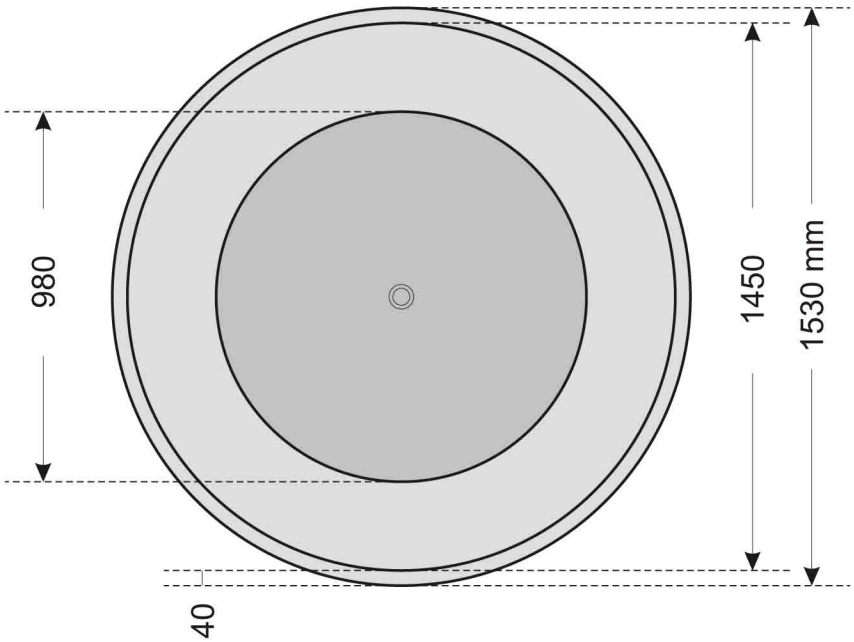


Top view

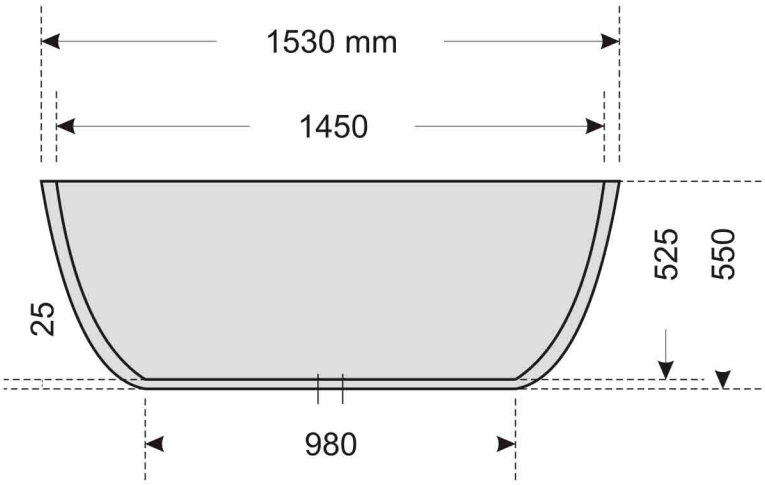


Front view