TOP

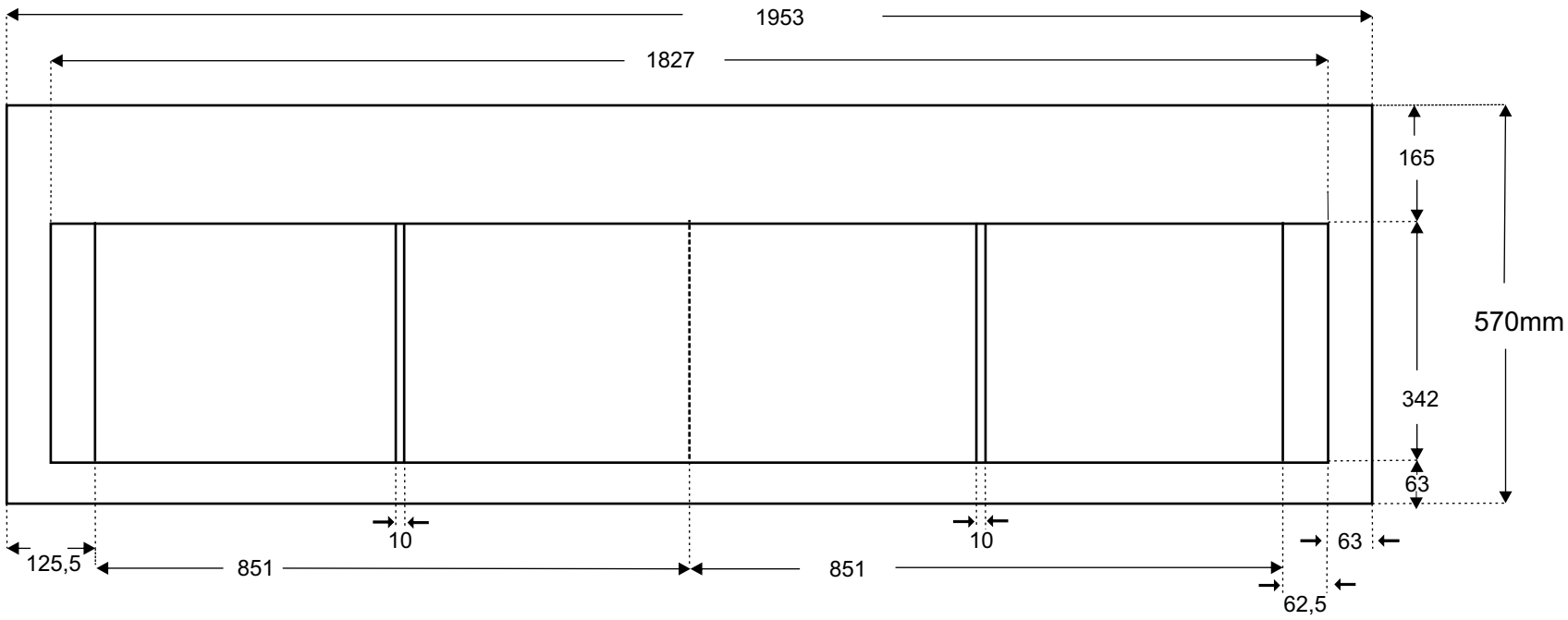

FRONT

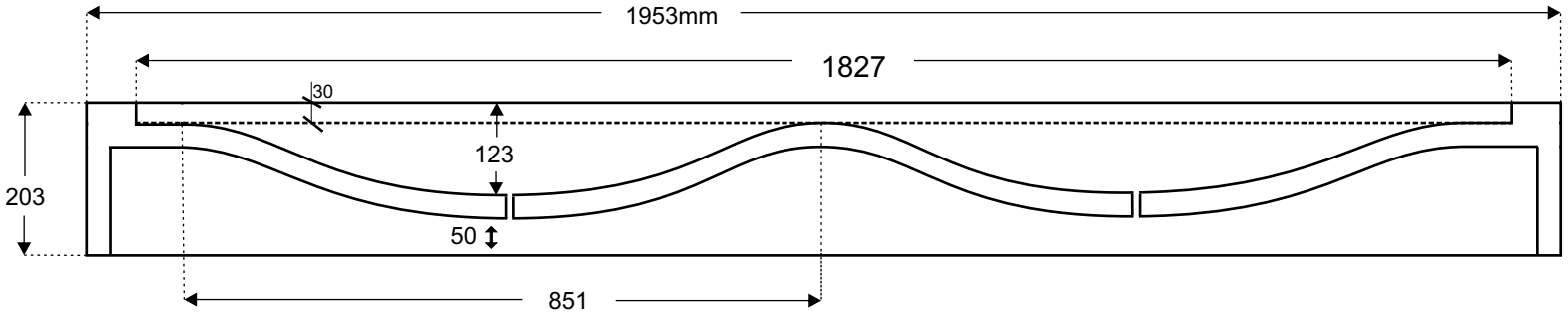
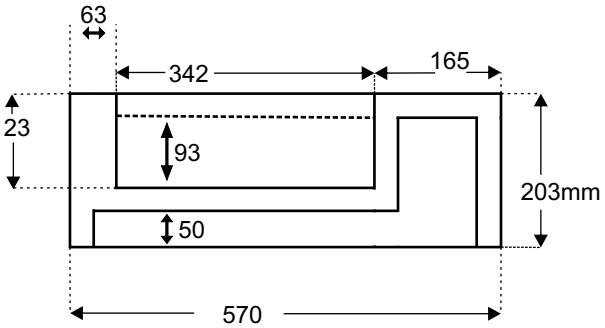
SIDE